CACHFIRES

FOCO MYST FOUR 1000

HYB-30-111

Foco Myst Four 1000 open vapor fireplace, which is not flammable.

TECHNICAL SPECIFICATIONS

Features

Adjustable flame	Yes
Control	Remote Control
Remote control	Yes (included)
Thermostat	No

Key Specifications

Product type	4-sided Opti-myst Fireplace
Brand	Foco
Use	Indoor
Warranty	2 years

Size & Weight

Length/Width	100 cm
Depth	40 cm
Weight	25 kg
Cable lenght	150 cm

Technical Specifications

Burner Model	Dimplex Optimyst Cassette 500
Fuel	Water and Electricity
Burning time up to	10 hours
Capacity	2 Litres
Flame colours	1 colours
Heat output (max)	No heat kW
Consumption	220 L/h

Material & Appearance

Material	Steel
Colour	Black
Finish	Matte
Interior (colour/material)	Black
Flame view	44,1
Decoration	Wood (Additional)
Glas included	Yes
Glass Height	15 cm

Installation Details

Required ventilation opening	210

Flue/Chimney	Not Required
Power requirements	Yes

TECHNICAL DRAWING

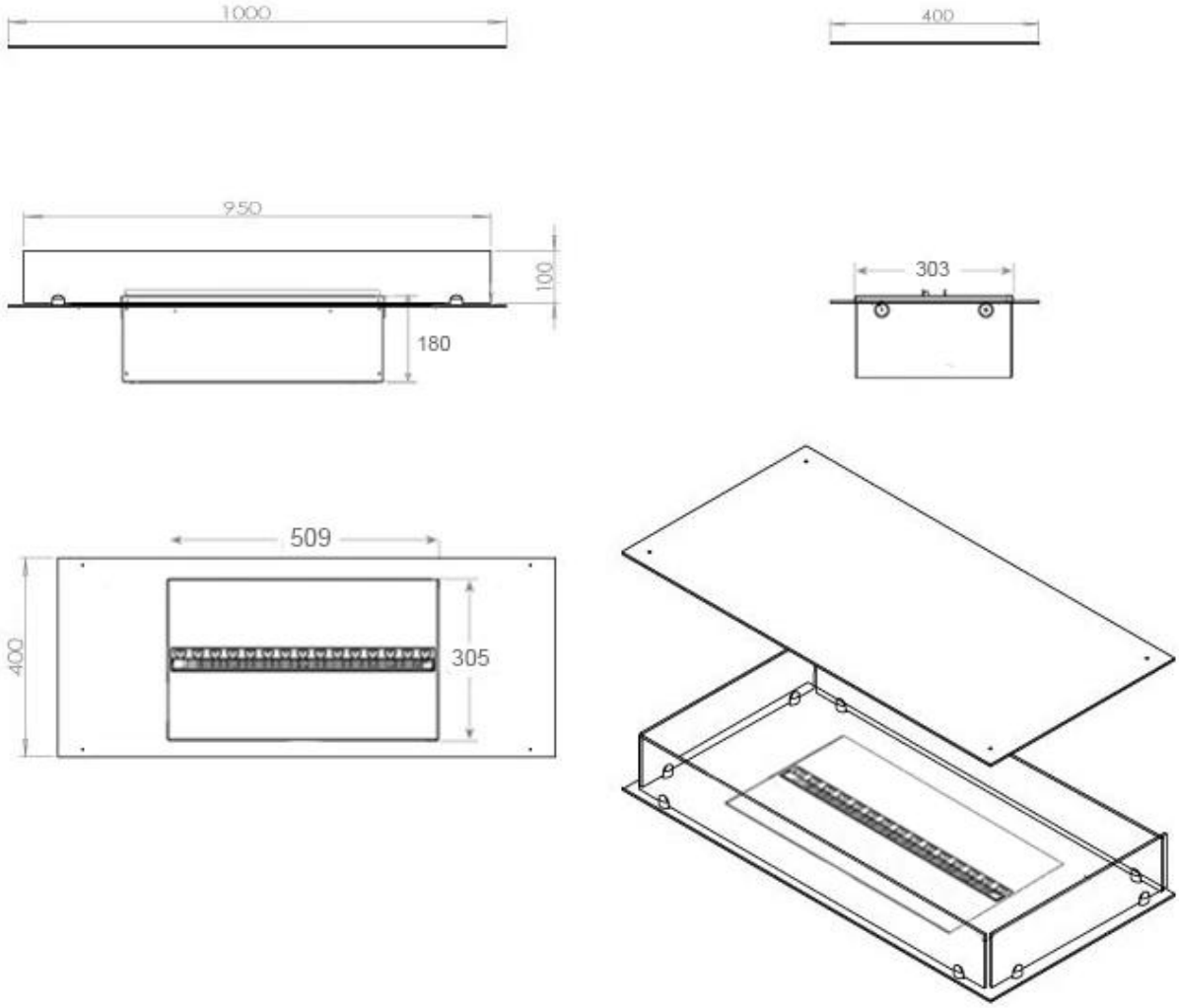

CASSETTE 500 MANUAL

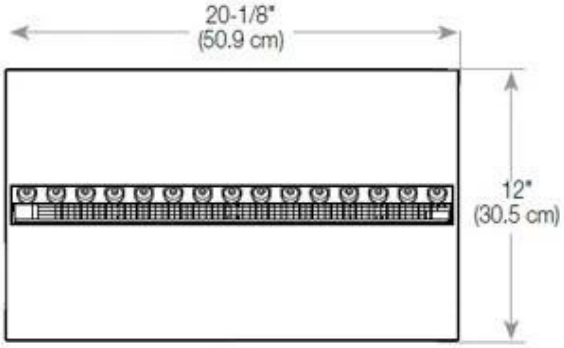

TOP

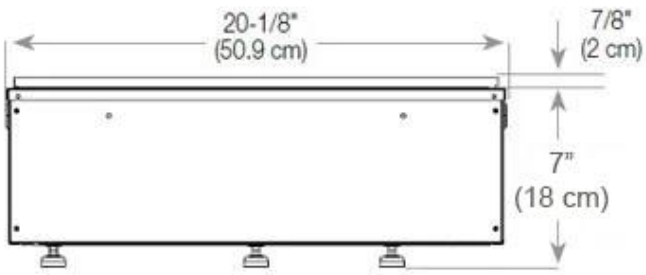

FRONT

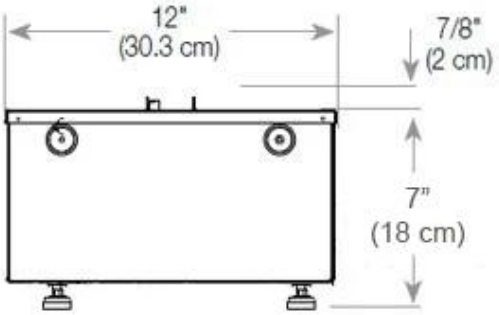

SIDE

CASSETTE 500 AUTOMATIC

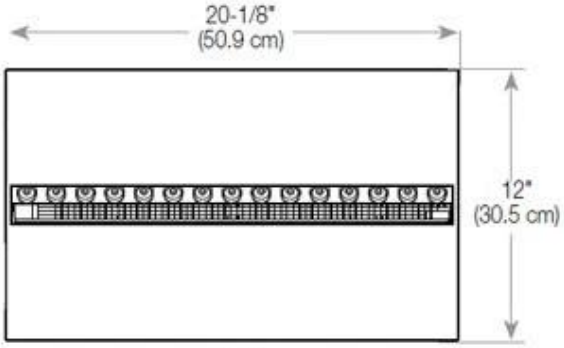

TOP

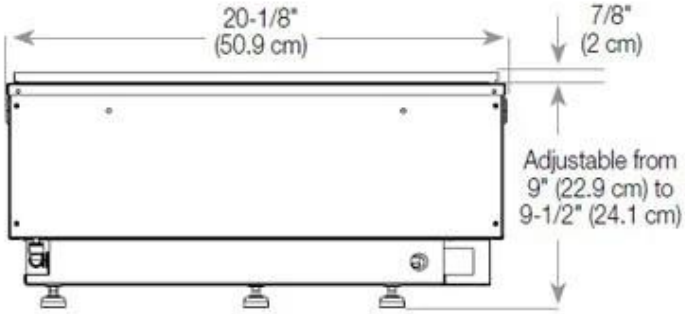

FRONT

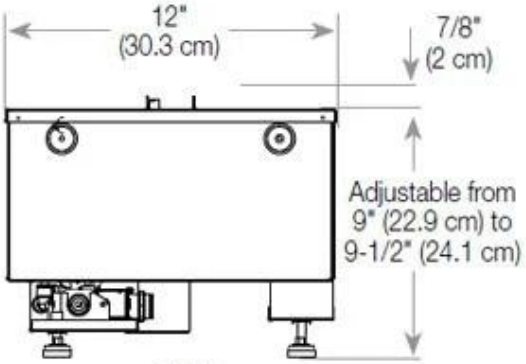

SIDE